HARSCO RAIL
Enabling TECHNOLOGY IN MOTION

www.harscorail.com

SERVICE BULLETIN

MAINTENANCE OF WAY EQUIPMENT

DATE: 10 - 2021 **BULLETIN NO:** 21-008

TITLE: BUGGY DERAIL ALARM KIT - 6700

RATING:

- ☐ **DIRECTIVE** (Action Is Required)
- ☐ **ALERT** (Potential Problem)
- ☐ **INFORMATION** (Action Is Optional)
- ☒ **PRODUCT IMPROVEMENT** (Enhance Product)

PRODUCT SERIES / MODEL: 6700 Production / Switch Tampers with Jupiter II

SERIAL NO: N/A

SUMMARY: Harsco Rail has developed a Derail Alarm Kit to detect and prevent derailment of the projector light buggy. It provides audible and visual notifications to the operator and has the ability to automatically reduce power and apply the brakes. Field installation takes approximately 3 hours and utilizes a wireless transmitter so no wires need to be run through the pusher bars.

OPERATIONAL IMPACT:

A projector buggy not equipped with the alarm kit may result in a derailment, which can cause damage to the machine and track structure and possible personal injury to the operator.

ACTION: Order one Buggy Derail Alarm Kit-6700 assembly kit (Harsco Rail part number 5126368) for each machine being reworked. Follow the instructions in this Service Bulletin to assemble and install the kit components onto the projector buggy. Refer to the supplied Harsco Rail drawing 5126368 - Buggy Derail Alarm Kit-6700, when installing the kit onto the projector buggy.

CONTACT: Harsco Rail Service Department
(803) 822-7546

Harsco Rail Parts Department
(800) 800-6410

SAFETY INFORMATION

- **Follow applicable railroad lockout - tagout procedures to disable energy sources when performing maintenance, making adjustments or repairs to the vehicle or equipment. Failure to heed this warning could result in severe bodily injury.**

Before Installing Buggy Derail Alarm Kit

1. Make sure all machine work components are in the stored position and locks are engaged.

2. Make sure the machine is shut down, parking brakes are applied, battery switch is turned off and the machine wheels are chocked.

3. Order one Buggy Derail Alarm Kit-6700 #5126368 for each machine being reworked.

ITEM	PART NO	DESCRIPTION	QTY
	5126368	Buggy Derail Alarm Kit - 6700	1
1	5122546	Sensor Mounting Assembly	2
2	5128261	Enclosure, Derail Kit, 6700	1
3	5126602	Bracket, Derailment Sensor	2
4	3401326	Cable,M12-M/F 3M SH 5-Cond	2
5	F001106	Washer, Flat, 1/4", USS, ZP	4
6	F013588	1/4-20 Elas Stp Nut	8
7	F009825	Hex HC Scr 1/4-20X1 Gr5	4
8	F001025	Washer, Lock, 3/8", Medium, ZP	4
9	F007020	Nut, Hex, 3/8-16, Gd5, ZP	4
10	F002915	Hex Hd Cap Scr 3/8-16X3 1/4	4
11	5126682	Bracket, Enclosure	1
12	5128197	Bracket, Enclosure	1
13	F009535	Washer, Lock, 1/4", Medium, ZP	8
14	A0036392	1/4-20x 7/8 HHCS Gr5 Full Thd	4
15	5127808	Buggy Derail Alarm Sftwre 6700	1
16	F018229	Ty-Rap	16
17	F011626	10-24 X 3/4 Skt Hd Cs	4
18	F009542	Nut, Hex, #10-24, Gd2, ZP	4
19	405410	DIN Rail, 3.0" Long	1
20	5070045	Circuit Breaker, 3 Amp 1 Pole	1
21	F041270	End Stop	2
22	250648-5	Washer, Lock, M5, DIN127	4
23	252028-29	Nut- Hex, Coarse, Class 8, M5x0.8 Zinc	2
24	251203-78	Screw-Mach, Pan Hd, M5 X 16 mm Lg	2

Install 5128261 - Enclosure, Derail Kit, 6700

1. Mount (11) 5126682 – Bracket, Enclosure to the bracket on the Projector Buggy Assembly and secure with four new fasteners (6) F013588 1/4-20 Elas Stp Nut, (7) F009825 Hex HC Scr 1/4-20X1 Gr5, and (13) F009535 Washer, Lock, 1/4", Medium, ZP, as shown in Harsco Rail drawing 5126368 (Sheet 2 - Sections C-C, F-F, and inset image).

   If there is an additional enclosure on the front of the bracket - remove the fasteners securing the right side of the existing enclosure as seen in Harsco Rail drawing 5126368 (Sheet 3). Save the fasteners for re-installation, but discard the two jam nuts, they will not be re-used. Mount (12) 5128197 - Bracket, Enclosure to the side of existing enclosure and secure with the saved fasteners.

2. Mount (2) 5128261– Enclosure, Derail Kit, 6700 with four new fasteners (5) F001106 Washer, Flat, 1/4", USS, ZP, (6) F013588 1/4-20 Elas Stp Nut, (13) F009535 Washer, Lock, 1/4", Medium, ZP, and (14) A0036392 1/4-20x 7/8 HHCS Gr5 Full Thd, as shown in Harsco Rail drawing 5126368 (Sheet 2 - Sections C-C, F-F, and inset image).

   If there is an additional enclosure on the front of the bracket - mount (2) 5128261– Enclosure, Derail Kit, 6700 to (12) 5128197 - Bracket, Enclosure and secure with four new fasteners (5) F001106 Washer, Flat, 1/4", USS, ZP, (6) F013588 1/4-20 Elas Stp Nut, (13) F009535 Washer, Lock, 1/4", Medium, ZP, and (14) A0036392 1/4-20x 7/8 HHCS Gr5 Full Thd, as seen in Harsco Rail drawing 5126368 (Sheet 3).

Install 5122546 - Sensor Mounting Assemblies

1. Mount (3) 5126602 - Bracket, Derailment Sensor with two new fasteners (8) F001025 Washer, Lock, 3/8", Medium, ZP, (9) F007020 Nut, Hex, 3/8-16, Gd5, ZP and (10) F002915 Hex Hd Cap Scr 3/8-16X3 1/4. Repeat for installing the Bracket, Derailment Sensor on the opposite side as shown in Harsco Rail drawing 5126368 (Sheet 2 - Section A-A).

2. Mount (1) 5122546 - Sensor Mounting Assembly onto (3) 5126602 - Bracket, Derailment Sensor and secure with fasteners included with (1) 5122546 - Sensor Mounting Assembly. Repeat for installing the Sensor Mounting Assembly on the opposite side.

3. Loosen fasteners securing the rubber mounts on (1) 5122546 - Sensor Mounting Assembly and adjust center of sensor to align with center of rail. Adjust Sensor height to 1.52 in (38.6 mm) from the top of the rail - as seen in Harsco Rail drawing 5126368 (Sheet 2 - Section A-A). Securely tighten fasteners on the rubber mounts. Repeat for adjusting the other Sensor Mounting Assembly above the other rail.

4. Connect one end of (4) 3401326 Cable, M12-M/F 3M SH 5-Cond to a connector on the side of (2) 5128261, Enclosure, Derail Kit - 6700 and the opposite end to the newly mounted (1) 5122546 - Sensor Mounting Assembly - as shown in Harsco Rail drawing 5126368 (Sheet 5). Repeat for connecting the other Cable to the other Sensor Mounting Assembly above the other rail.

Install 5125084 - Kit, Radio I/O Module

1. Drill four Ø .22 holes inside the cab at location shown in Harsco Rail drawing 5126368 (Sheet 4 - Section D-D).

2. Install 5125084 Kit, Radio I/O Module (part of Item 2 - 5128261, Enclosure, Derail Kit) inside cab. Secure radio module with hardware supplied with it - four each (17) F011626 10-24 x 3/4 Skt Hd CS and (18) F009542 Nut, Hex, #10-24, Gd2, ZP. See Harsco Rail drawing 5126368 (Sheet 4 - Section D-D)

3. Connect 3401340 Cable, M12-M/PIG 8M 4-Cond HF (part of Item 2 - 5128261, Enclosure, Derail Kit) to Jupiter Module CAN:02 - port C3 (C3-6, C3-7) and to the newly mounted radio module inside cab - as shown in Harsco Rail drawing 5126368 (sheets 4 & 5).

4. Drill two Ø .22 holes inside the cab at location shown in Harsco Rail drawing 5126368 (Sheet 4 - Section D-D) for mounting (19) 405410 - DIN Rail, 3.0" Long.

5. Secure (19) 405410 - DIN Rail, 3.0" Long with four two new fasteners (22) 250648-5 - Washer, Lock, M5, DIN127, (23) 252028-29 - Nut- Hex, Coarse, Class 8, M5x0.8 Zinc, and (24) 251203-78 - Screw-Mach, Pan Hd, M5 X 16 mm Lg.

6. Assemble (20) 5070045 - Circuit Breaker, 3 Amp 1 Pole, and both (21) F041270 - End Stops onto (19) DIN rail, 3.0” Long.

Installing Buggy Derail Alarm Software

1. The Buggy Derail Alarm Software 6700 (Item 15) is programmed onto the 8GB USB flash drive, and is specifically written for each machine by the serial number provided when the Buggy Derail Alarm Kit was ordered. Be certain to follow the software installation instructions exactly.

2. Verify and log all machine parameters before beginning the software download.

3. Turn the Jupiter computer OFF.

4. Make sure that the machine's engine is shut down, parking brakes are applied and battery master switch is OFF.

5. Turn the battery master switch on. Turn the Jupiter computer ON.

6. In some Jupiter-II applications, a new software "Install Permission" panel now asks the user whether they want to shut down the machine application in order to download a new software package.
   a. Press the "Esc" button to leave the USB drive installed but not install new software.
   b. Press the "Enter" button to proceed to software install (Super-Download screen).
   c. When software has finished installing, turn the Jupiter computer OFF and then back ON again.

7. Verify that none of the machine parameters have changed. If any parameters have changed, correct them using the parameter information that was logged.

8. Start the machine's engine. Turn Jupiter ON. Check the function of the entire Jupiter Control System. Make sure all functions controlled through the Jupiter II system are operating properly.

9. If any problems are encountered, contact the Harsco Rail Service Department.

© 2021 HARSCO RAIL,LLC, ALL RIGHTS RESERVED

306 West 4th Street
Fairmont, MN
56031-1837
Tel: (507) 235-7376
Parts: (800) 800-6410
Fax: (507) 235-7372

2401 Edmund Road, Box 20
Cayce-West Columbia, SC
29171-0020
Tel: (803) 822-7420
Parts: (800) 800-6410
Fax: (803) 822-7403

1200 Conrad Industrial Dr.
Ludington, MI
49431
Tel: (231) 843-3431
Parts: (800) 800-6410
Fax: (231) 843-1644

Printed In USA

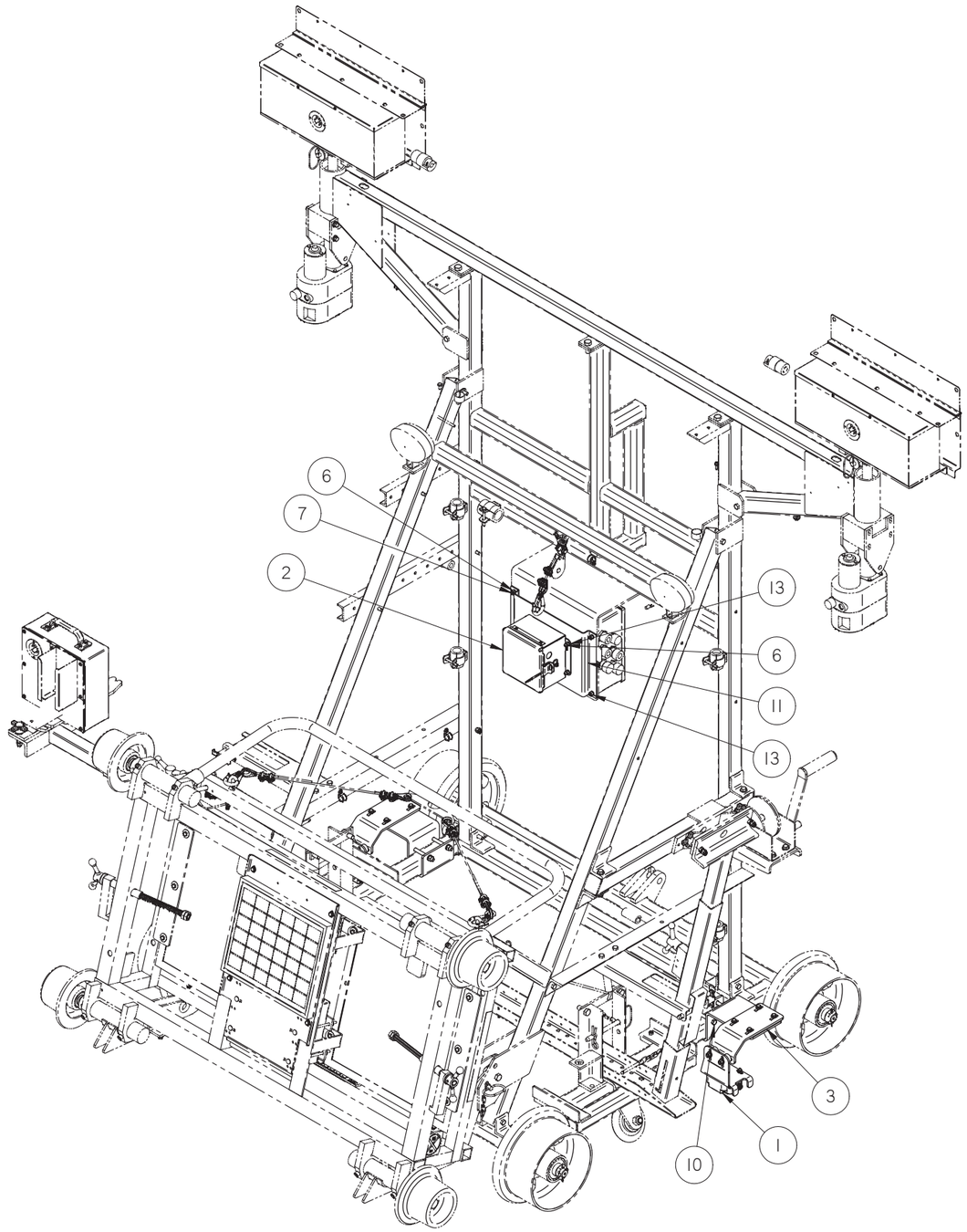

ITEM	PART NO	QTY	DESCRIPTION
1	5122546	2	SENSOR MOUNTING ASSEMBLY
(C) 2	5128261	1	ENCLOSURE, DERAIL KIT, 6700
3	5126602	2	BRACKET, DERAILMENT SENSOR
4	3401326	2	CABLE,M12-M/F 3M SH 5-COND
5	F001106	4	WASHER, FLAT, 1/4", USS, ZP
(C) 6	F013588	8	DC-1/4-20 ELAS STP NUT
7	F009825	4	DC-HEX HC SCR 1/4-20X1 GR5
8	F001025	4	WASHER, LOCK, 3/8", MEDIUM, ZP
9	F007020	4	NUT, HEX, 3/8-16, GD5, ZP
10	F002915	4	DC-HEX HD CAP SCR 3/8-16X3 1/3
11	5126682	1	BRACKET, ENCLOSURE
(C) 12	5128197	1	BRACKET
(C) 13	F009535	8	WASHER, LOCK, 1/4", MEDIUM, ZP
14	A0036392	4	1/4-20X 7/8 HHCS GR5 FULL THD
15	5127808	1	BUGGY DERAIL ALARM SFTWRE 6700
16	F018229	16	TY-RAP
17	F011626	4	DC-10-24 X 3/4 SKT HD CS
18	F009542	4	NUT, HEX, #10-24, GD2, ZP
19	405410	1	DIN RAIL, 3.0" LONG
20	5070045	1	CIRCUIT BREAKER, 3 AMP 1 POLE
21	F041270	2	END STOP
22	250648-5	4	WASHER, LOCK, M5, DIN127
23	252028-29	2	NUT- HEX, COARSE, CLASS 8, M5X0.8 ZINC
24	251203-78	2	SCREW-MACH, PAN HD, M5 X 16 MM LG

REFERENCE DRAWINGS	
INCLUDE A COPY OF EACH OF THE FOLLOWING DRAWINGS WITH EACH KIT	
DRAWING#	DESCRIPTION
5122546	SENSOR MOUNTING ASSEMBLY
SB21-008	SERVICE BULLETIN, BUGGY DERAIL ALARM KIT-6700
5128197	BRACKET
5118866	COILED CABLE, 18AWG/15 COND
5126682	BRACKET, ENCLOSURE

CONFIDENTIAL

COPYRIGHT 2021 HARSCO CORPORATION, ALL RIGHTS RESERVED. THIS DRAWING OR DOCUMENT IS THE PROPERTY OF HARSCO AND EMBODIES CONFIDENTIAL INFORMATION, TRADE SECRET INFORMATION, AND/OR KNOW-HOW THAT IS THE PROPERTY OF HARSCO. BY ACCEPTING THIS DRAWING OR DOCUMENT, THE RECIPIENT AGREES (1) NOT TO PROVIDE, OR OTHERWISE MAKE AVAILABLE, THE DRAWING OR DOCUMENT, OR ANY INFORMATION OR KNOW-HOW EMBODIED THEREIN, TO ANY THIRD PARTY AND (2) NOT TO REPRODUCE OR USE THE DRAWING OR DOCUMENT TO MANUFACTURE ANY APPARATUS OR DEVICE, WITHOUT THE PRIOR WRITTEN AUTHORIZATION OF HARSCO.

FEATURES ENCLOSED IN ⬭ ARE KEY CHARACTERISTICS

NOMINAL SIZE RANGE	INCH PLUS OR MINUS		NOMINAL SIZE RANGE	METRIC PLUS OR MINUS	
OVER TO	2 PLACE DECIMAL	3 PLACE DECIMAL	OVER TO	1 PLACE DECIMAL	2 PLACE DECIMAL
0 6	.03	.005	0 150	.8	.13
6 24	.04	.008	150 600	1.0	.20
24 -	.06	.010	600 -	1.5	.25

UNLESS OTHERWISE SPECIFIED:
1. REMOVE BURRS AND BREAK SHARP EDGES
2. ALL MACHINED SURFACES WILL HAVE A SURFACE FINISH OF 125 MICROINCHES
3. ALL HOLES TO BE TRUE WITH A .001" CONCENTRICITY WITHIN .010"
3. ALL WELDS SHOULD ADHERE TO THE MOST CURRENT A.W.S WELDING STANDARDS
4. TORQUE ALL FASTENERS PER STD-1603D
5. TORQUE ALL FITTINGS PER STD-1309

THIRD ANGLE PROJECTION

DRAFTED PER HARSCO RAIL STANDARD STD-1601D

Inch
[mm]

(C)

CHANGE	R/L	REVISION	DR	DATE
EC615687	A	NEW RELEASE	BKP	07/23/21
EC615733	B	ADDED IT.3 TO 13	BKP	07/30/21
EC615992	C	IT.2 WAS 5125089, IT.6 WAS F004606, IT.12 WAS 153140-428, IT.13 WAS 250010-29; ADDED IT. 14 TO 24; ADDED SHEET #2,3,4,5.	BKP	10/05/21

Description: BUGGY DERAIL ALARM KIT-6700

HARSCO RAIL

Material:

Machine Type: 6700

Size: D

Weight: 33.0 lbm

Drawn: BPamidemarri

Date Drawn: 7/23/2021

Part Number: 5126368

Sheet: 1 of 5

SOLID EDGE DRAWING

DO NOT SCALE

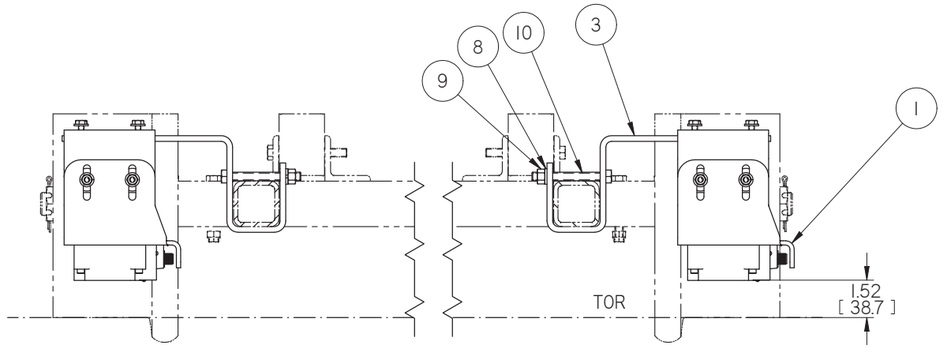

SECTION A-A

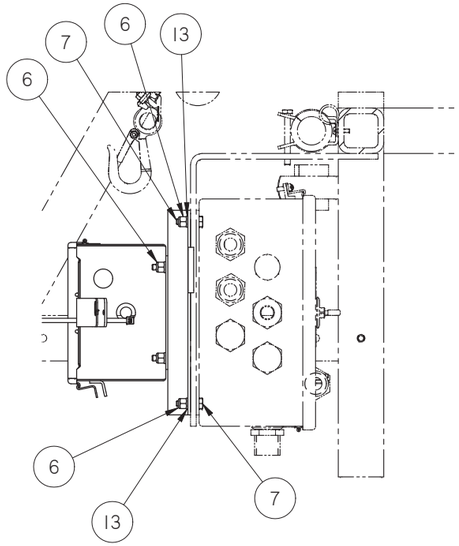

SECTION C-C

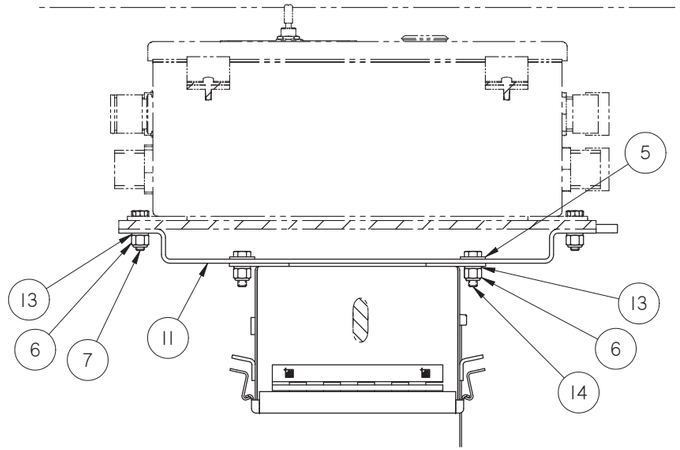

SECTION F-F

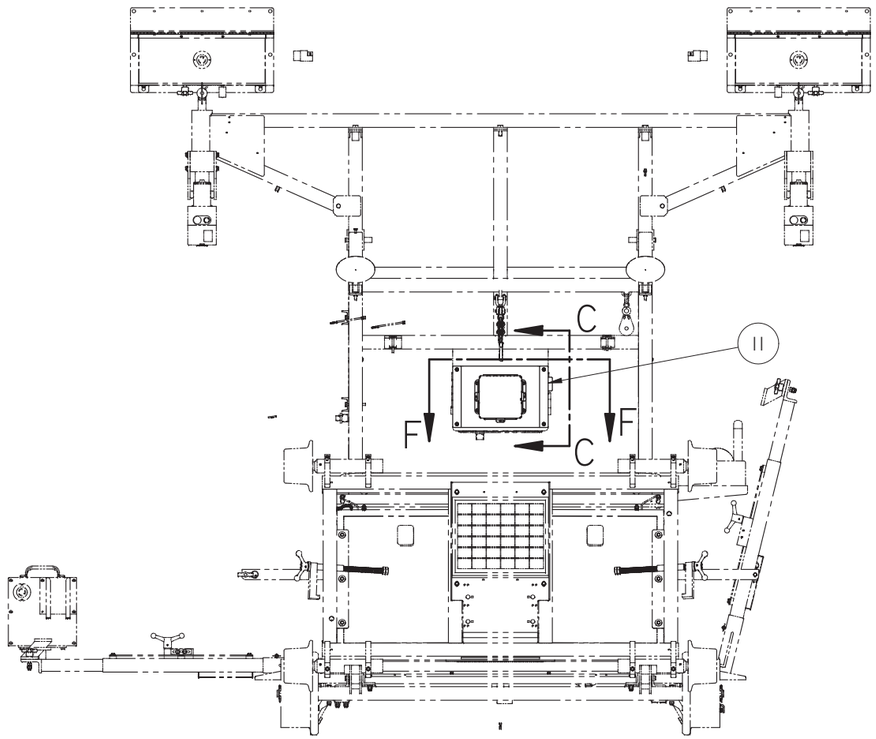

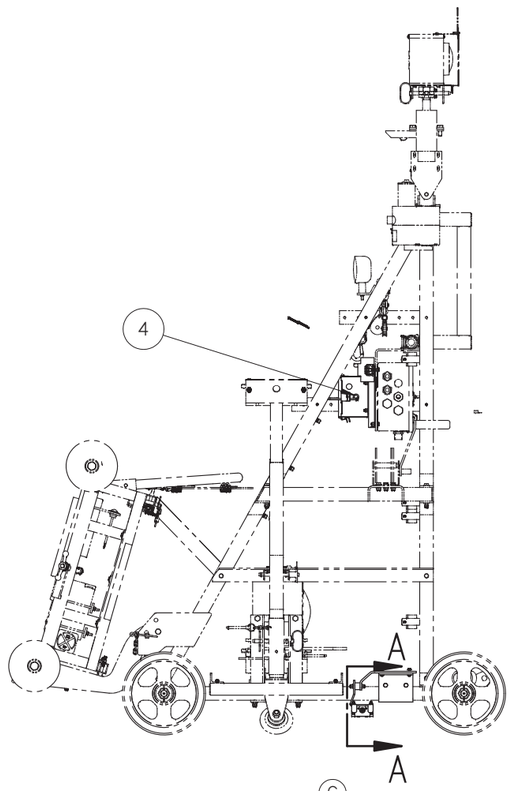

Inch
[mm]

CONFIDENTIAL

COPYRIGHT 2021 HARSCO CORPORATION, ALL RIGHTS RESERVED. THIS DRAWING OR DOCUMENT IS THE PROPERTY OF HARSCO AND EMBODIES CONFIDENTIAL INFORMATION, TRADE SECRET INFORMATION, AND/OR KNOW-HOW THAT IS THE PROPERTY OF HARSCO. BY ACCEPTING THIS DRAWING OR DOCUMENT, THE RECIPIENT AGREES (1) NOT TO PROVIDE, OR OTHERWISE MAKE AVAILABLE, THE DRAWING OR DOCUMENT, OR ANY INFORMATION OR KNOW-HOW EMBODIED THEREIN, TO ANY THIRD PARTY AND (2) NOT TO REPRODUCE OR USE THE DRAWING OR DOCUMENT TO MANUFACTURE ANY APPARATUS OR DEVICE, WITHOUT THE PRIOR WRITTEN AUTHORIZATION OF HARSCO.

FEATURES ENCLOSED IN ⬭ ARE KEY CHARACTERISTICS

NOMINAL SIZE RANGE		INCH PLUS OR MINUS		NOMINAL SIZE RANGE		METRIC PLUS OR MINUS	
OVER	TO	2 PLACE DECIMAL	3 PLACE DECIMAL	OVER	TO	1 PLACE DECIMAL	2 PLACE DECIMAL
0	6	.03	.005	0	150	.8	.13
6	24	.04	.008	150	600	1.0	.20
24	-	.06	.010	600	-	1.5	.25

UNLESS OTHERWISE SPECIFIED:
1. REMOVE BURRS AND BREAK SHARP EDGES
2. ALL MACHINED SURFACES WILL HAVE:
A SURFACE FINISH OF 125 MICROINCHES
ANGULAR TOLERANCE OF +.50°
CONCENTRICITY WITHIN .010
3. ALL WELDS SHOULD ADHERE TO THE MOST CURRENT A.W.S WELDING STANDARDS
4. TORQUE ALL FASTENERS PER STD-1603D
5. TORQUE ALL FITTINGS PER STD 1349

THIRD ANGLE PROJECTION

DRAFTED PER HARSCO RAIL STANDARD
STD-1601D

CHANGE	R/L	REVISION	DR	DATE
EC615687	A	NEW RELEASE	BKP	07/23/21
EC615733	B	ADDED IT.3 TO 13	BKP	07/30/21
EC615992	C	IT.2 WAS 5125089, IT.6 WAS F004606, IT.12 WAS 153140-428, IT.13 WAS 250010-29; ADDED IT. 14 TO 24; ADDED SHEET #2,3,4,5.	BKP	10/05/21

Description: BUGGY DERAIL ALARM KIT-6700

HARSCO RAIL

Material

Machine Type: 6700

Size: D

Weight: 33.0 lbm

Drawn: BPamidemarri

Date Drawn: 7/23/2021

Part Number: 5126368

Sheet: 2 of 5

SOLID EDGE DRAWING

DO NOT SCALE

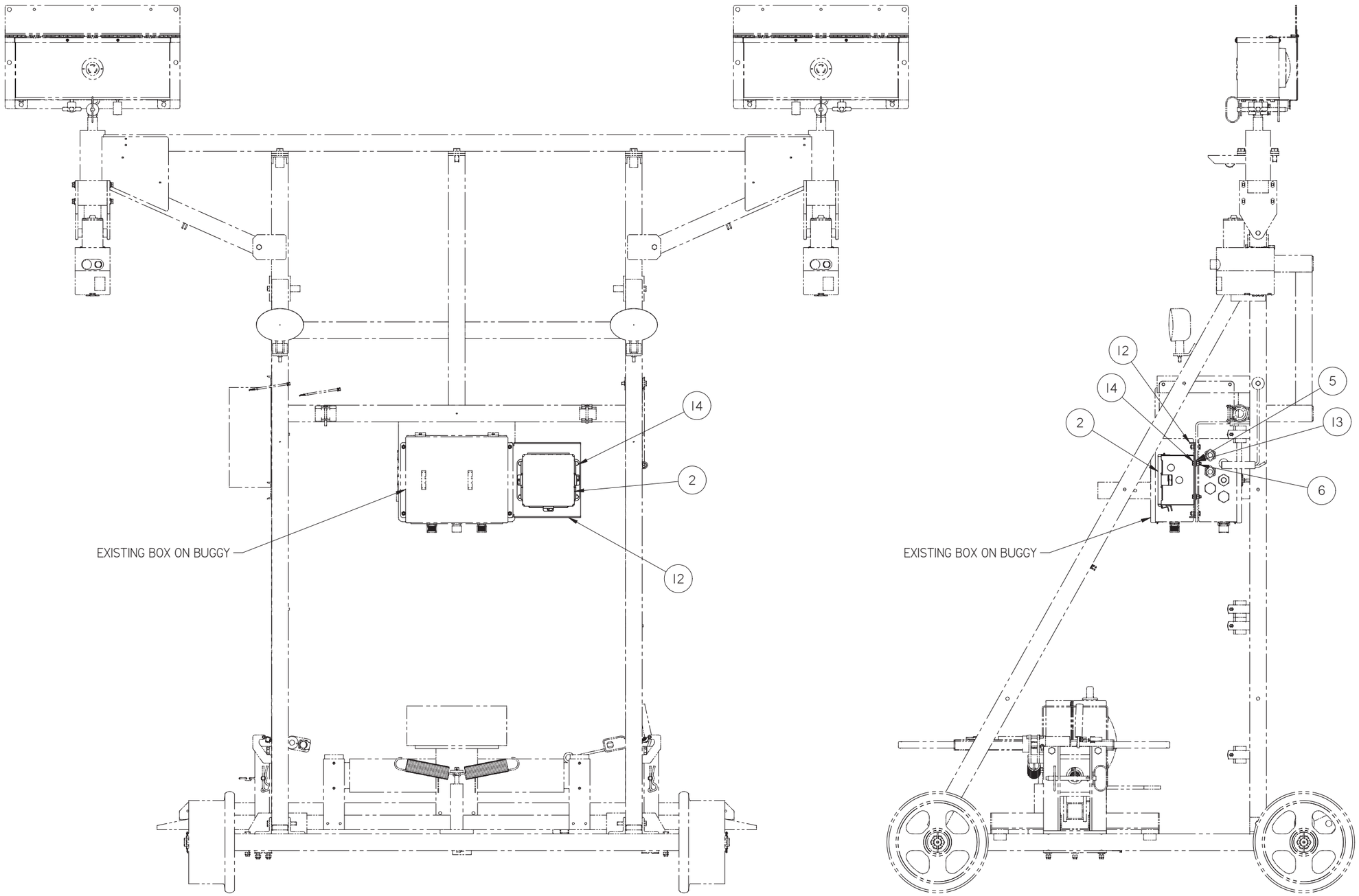

BUGGY WITH ADDITIONAL BOX ON THE FRONT OF THE BRACKET

Inch
[mm]

CONFIDENTIAL

COPYRIGHT 2021 HARSCO CORPORATION, ALL RIGHTS RESERVED. THIS DRAWING OR DOCUMENT IS THE PROPERTY OF HARSCO AND EMBODIES CONFIDENTIAL INFORMATION, TRADE SECRET INFORMATION, AND/OR KNOW-HOW THAT IS THE PROPERTY OF HARSCO. BY ACCEPTING THIS DRAWING OR DOCUMENT, THE RECIPIENT AGREES (1) NOT TO PROVIDE, OR OTHERWISE MAKE AVAILABLE, THE DRAWING OR DOCUMENT, OR ANY INFORMATION OR KNOW-HOW EMBODIED THEREIN, TO ANY THIRD PARTY AND (2) NOT TO REPRODUCE OR USE THE DRAWING OR DOCUMENT TO MANUFACTURE ANY APPARATUS OR DEVICE, WITHOUT THE PRIOR WRITTEN AUTHORIZATION OF HARSCO.

FEATURES ENCLOSED IN ⬭ ARE KEY CHARACTERISTICS

NOMINAL SIZE RANGE		INCH PLUS OR MINUS		NOMINAL SIZE RANGE		METRIC PLUS OR MINUS	
OVER	TO	2 PLACE DECIMAL	3 PLACE DECIMAL	OVER	TO	1 PLACE DECIMAL	2 PLACE DECIMAL
0	6	.03	.005	0	150	.8	.13
6	24	.04	.008	150	600	1.0	.20
24	-	.06	.010	600	-	1.5	.25

UNLESS OTHERWISE SPECIFIED:
1. REMOVE BURRS AND BREAK SHARP EDGES
2. ALL MACHINED SURFACES WILL HAVE: A SURFACE FINISH OF 125 MICROINCHES ANGULAR TOLERANCE OF ± .50° CONCENTRICITY WITHIN .010
3. ALL WELDS SHOULD ADHERE TO THE MOST CURRENT A.W.S WELDING STANDARDS
4. TORQUE ALL FASTENERS PER STD-1603D
5. TORQUE ALL FITTINGS PER STD 1369

THIRD ANGLE PROJECTION

DRAFTED PER HARSCO RAIL STANDARD STD-1601D

C

CHANGE	R/L	REVISION	DR	DATE
EC615687	A	NEW RELEASE	BKP	07/23/21
EC615733	B	ADDED IT.3 TO 13	BKP	07/30/21
EC615992	C	IT.2 WAS 5125089, IT.6 WAS F004606, IT.12 WAS 153140-428, IT.13 WAS 250010-29; ADDED IT. 14 TO 24; ADDED SHEET #2,3,4,5.	BKP	10/05/21

Description: BUGGY DERAIL ALARM KIT-6700

HARSCO RAIL

Material

Machine Type: 6700

Size: D

Weight: 33.0 lbm

Drawn: BPamidemarri

Date Drawn: 7/23/2021

Part Number: 5126368

Sheet: 3 of 5

SOLID EDGE DRAWING

DO NOT SCALE

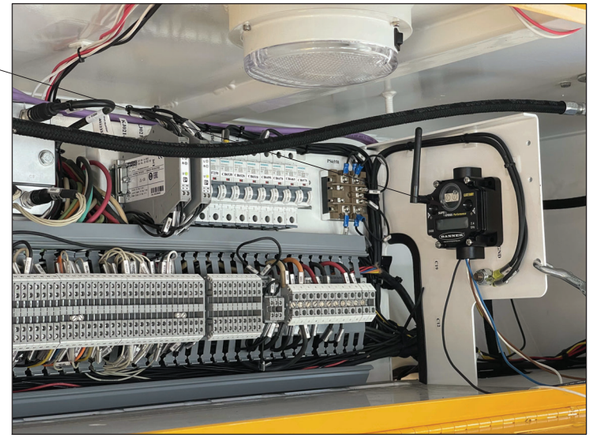

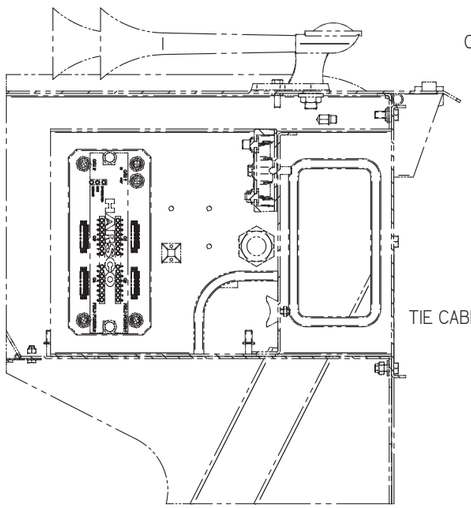

SECTION E-E

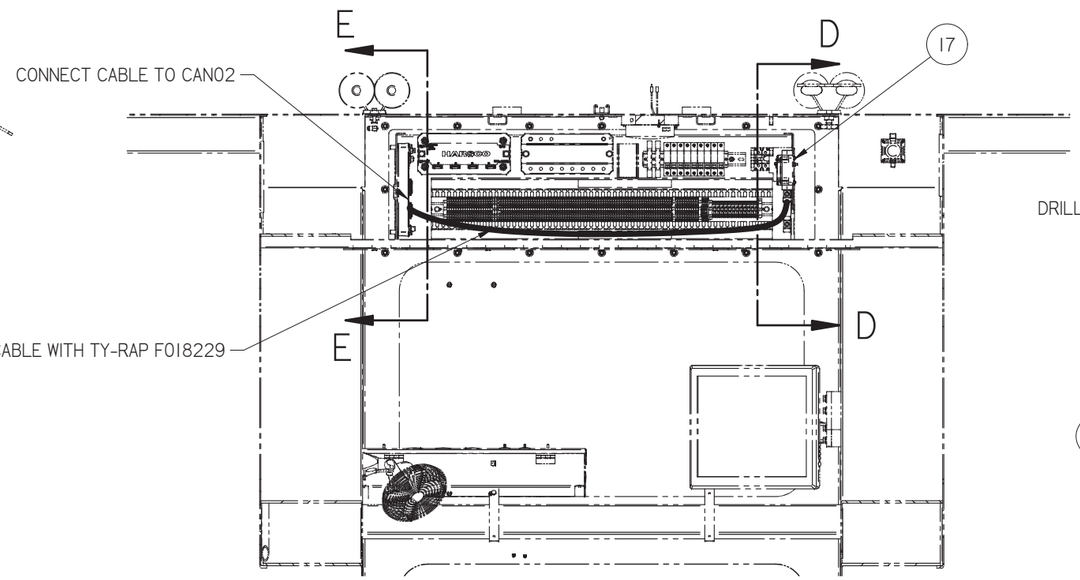

SECTION B-B

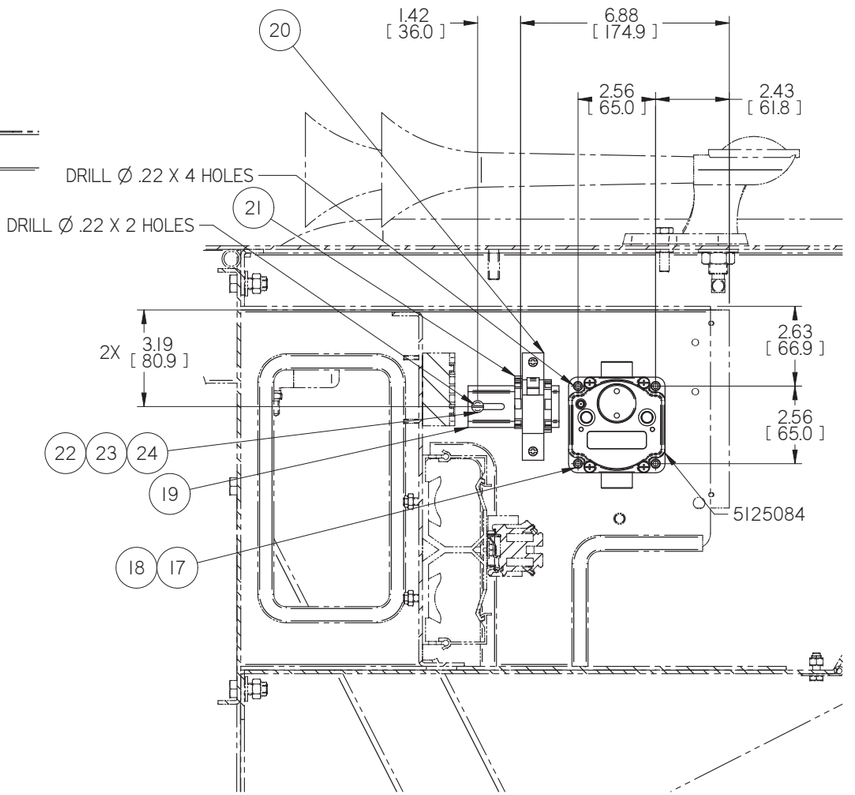

SECTION D-D

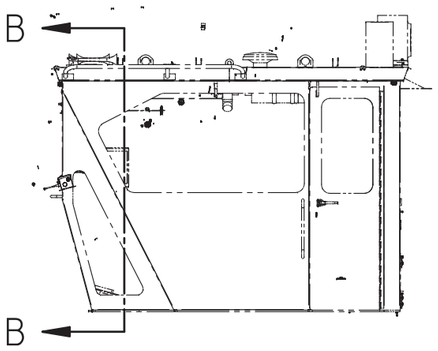

Inch
[mm]

CONFIDENTIAL

COPYRIGHT 2021 HARSCO CORPORATION, ALL RIGHTS RESERVED. THIS DRAWING OR DOCUMENT IS THE PROPERTY OF HARSCO AND EMBODIES CONFIDENTIAL INFORMATION, TRADE SECRET INFORMATION, AND/OR KNOW-HOW THAT IS THE PROPERTY OF HARSCO. BY ACCEPTING THIS DRAWING OR DOCUMENT, THE RECIPIENT AGREES (1) NOT TO PROVIDE, OR OTHERWISE MAKE AVAILABLE, THE DRAWING OR DOCUMENT, OR ANY INFORMATION OR KNOW-HOW EMBODIED THEREIN, TO ANY THIRD PARTY AND (2) NOT TO REPRODUCE OR USE THE DRAWING OR DOCUMENT TO MANUFACTURE ANY APPARATUS OR DEVICE, WITHOUT THE PRIOR WRITTEN AUTHORIZATION OF HARSCO.

FEATURES ENCLOSED IN ⬭ ARE KEY CHARACTERISTICS

NOMINAL SIZE RANGE		INCH PLUS OR MINUS		NOMINAL SIZE RANGE		METRIC PLUS OR MINUS	
OVER	TO	2 PLACE DECIMAL	3 PLACE DECIMAL	OVER	TO	1 PLACE DECIMAL	2 PLACE DECIMAL
0	6	.03	.005	0	150	.8	.13
6	24	.04	.008	150	600	1.0	.20
24	-	.06	.010	600	-	1.5	.25

UNLESS OTHERWISE SPECIFIED:
1. REMOVE BURRS AND BREAK SHARP EDGES
2. ALL MACHINED SURFACES WILL HAVE: A SURFACE FINISH OF 125 MICROINCHES ANGULAR TOLERANCE OF ± .50° CONCENTRICITY WITHIN .010
3. ALL WELDS SHOULD ADHERE TO THE MOST CURRENT A.W.S WELDING STANDARDS
4. TORQUE ALL FASTENERS PER STD-1603D
5. TORQUE ALL FITTINGS PER STD 5369

THIRD ANGLE PROJECTION

DRAFTED PER HARSCO RAIL STANDARD STD-1601D

C

CHANGE	R/L	REVISION	DR	DATE
EC615687	A	NEW RELEASE	BKP	07/23/21
EC615733	B	ADDED IT.3 TO 13	BKP	07/30/21
EC615992	C	IT.2 WAS 5125089, IT.6 WAS F004606, IT.12 WAS 153140-428, IT.13 WAS 250010-29; ADDED IT. 14 TO 24; ADDED SHEET #2,3,4,5.	BKP	10/05/21

Description: BUGGY DERAIL ALARM KIT-6700

HARSCO RAIL

Material

Machine Type: 6700

Size: D

Weight: 33.0 lbm

Drawn: BPamidemarri

Date Drawn: 7/23/2021

Part Number: 5126368

Sheet: 4 of 5

SOLID EDGE DRAWING

DO NOT SCALE

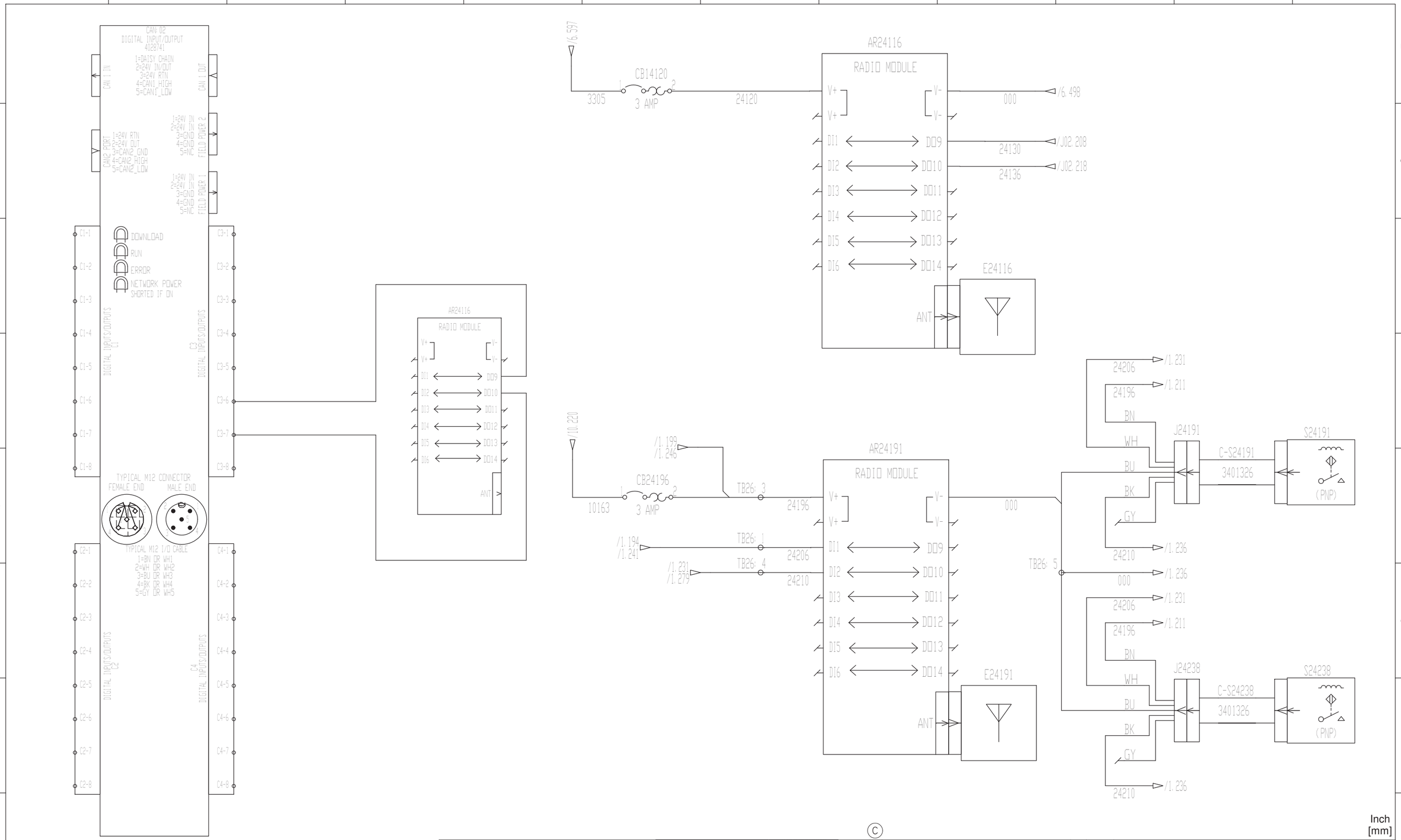

Inch
[mm]

C

CONFIDENTIAL

COPYRIGHT 2021 HARSCO CORPORATION, ALL RIGHTS RESERVED. THIS DRAWING OR DOCUMENT IS THE PROPERTY OF HARSCO AND EMBODIES CONFIDENTIAL INFORMATION, TRADE SECRET INFORMATION, AND/OR KNOW-HOW THAT IS THE PROPERTY OF HARSCO. BY ACCEPTING THIS DRAWING OR DOCUMENT, THE RECIPIENT AGREES (1) NOT TO PROVIDE, OR OTHERWISE MAKE AVAILABLE, THE DRAWING OR DOCUMENT, OR ANY INFORMATION OR KNOW-HOW EMBODIED THEREIN, TO ANY THIRD PARTY AND (2) NOT TO REPRODUCE OR USE THE DRAWING OR DOCUMENT TO MANUFACTURE ANY APPARATUS OR DEVICE, WITHOUT THE PRIOR WRITTEN AUTHORIZATION OF HARSCO.

FEATURES ENCLOSED IN ⬭ ARE KEY CHARACTERISTICS

NOMINAL SIZE RANGE		INCH PLUS OR MINUS		NOMINAL SIZE RANGE		METRIC PLUS OR MINUS	
OVER	TO	2 PLACE DECIMAL	3 PLACE DECIMAL	OVER	TO	1 PLACE DECIMAL	2 PLACE DECIMAL
0	6	.03	.005	0	150	.8	.13
6	24	.04	.008	150	600	1.0	.20
24	-	.06	.010	600	-	1.5	.25

UNLESS OTHERWISE SPECIFIED:
1. REMOVE BURRS AND BREAK SHARP EDGES
2. ALL MACHINED SURFACES WILL HAVE:
A. SURFACE FINISH OF 125 MICROINCHES ANGULAR TOLERANCE OF ± .50° CONCENTRICITY WITHIN .010
3. ALL WELDS SHOULD ADHERE TO THE MOST CURRENT A.W.S WELDING STANDARDS
4. TORQUE ALL FASTENERS PER STD-16030
5. TORQUE ALL FITTINGS PER STD 5369

THIRD ANGLE PROJECTION

DRAFTED PER HARSCO RAIL STANDARD
STD-1601D

CHANGE	R/L	REVISION	DR	DATE
EC615687	A	NEW RELEASE	BKP	07/23/21
EC615733	B	ADDED IT.3 TO 13	BKP	07/30/21
EC615992	C	IT.2 WAS 5125089, IT.6 WAS F004606, IT.12 WAS 153140-428, IT.13 WAS 250010-29; ADDED IT. 14 TO 24; ADDED SHEET #2,3,4,5.	BKP	10/05/21

Description: BUGGY DERAIL ALARM KIT-6700

HARSCO RAIL

Material

Machine Type: 6700

Size: D

Weight: 33.0 lbm

Drawn: BPamidemarri

Date Drawn: 7/23/2021

Part Number: 5126368

Sheet: 5 of 5

SOLID EDGE DRAWING

DO NOT SCALE